Enevator Air Standard

High Efficiency Air/Water Heat Pump
With Low GWP Refrigerant

- 20 models available
- Power outputs from 45 up to 455 kW
- Low noise
- Low GWP R454B refrigerant
- Supply temperatures up to 60°C
- Operates at external outdoor temperatures up to 43°C
- Can be cascaded up to 6 units
- BMS Integration system
- Hot water temperature outlet 60ºC

Standard accessories

- Condensate collection tray with antifreeze heating
- Double safety valves
- Electronic expansion valve
- Pressure gauges
- Antifreeze kit
- RS485 BMS serial interface card
- Vibration dampers
- Lifting eyes for cranes

© July 2026 A.O. Smith Water Products Company.
All right reserved www.aosmithme.com

The Enevator Air Standard high-efficiency air/water heat pumps are particularly suitable for applications where maximum efficiency in heating mode and a low noise level are required. The units are specifically designed to provide the best efficiency in heating mode; they can operate at outside temperatures up to 43°C and produce water up to a temperature of 60°C.

Technical Specifications

AWHE		45	50	70	75	90	105	115	135	150	160
Heating capacity (EN14511) (1)	kW	45,0	51,5	68,7	75,0	91,0	102,0	114,0	134,0	150,0	161,0
Total input power (EN14511) (1)	kW	11,2	13,0	16,3	18,4	21,4	24,5	27,0	31,6	36,6	38,9
COP (EN14511) (1)	W/W	4,02	3,96	4,21	4,08	4,25	4,16	4,22	4,24	4,10	4,14
Energy Class (2)		A++	A++	A++	A++	A++	A++	A++	A++	A++	A++
SCOP (2)	kWh/kWh	3,98	3,90	4,19	4,13	3,92	4,10	4,14	4,02	4,08	4,03
ηs,h (2)	%	156	153	165	162	154	161	163	158	160	158
Cooling capacity (EN14511) (3)	kW	36,9	43,2	57,6	61,5	76,5	85,5	95,0	112,0	124,0	134,0
Total input power (EN14511) (3)	kW	14,1	16,5	21,2	24,5	25,8	30,3	34,6	37,3	43,6	48,1
EER (EN14511) (3)	W/W	2,62	2,62	2,72	2,51	2,97	2,82	2,75	3,00	2,84	2,79
TER (EN14511) (4)	W/W	6,19	5,78	6,04	5,82	5,98	5,94	6,04	5,91	5,80	5,92
Sound power (5)	dB (A)	78	79	81	82	86	87	88	89	89	90
Sound pressure (6)	dB (A)	46	47	49	50	54	55	56	57	56	57
Power supply	V/Ph/Hz	400/3/50	400/3/50	400/3/50	400/3/50	400/3/50	400/3/50	400/3/50	400/3/50	400/3/50	400/3/50
Compressors / Circuits	n° / n°	2 / 1	2 / 1	2 / 1	2 / 1	2 / 1	2 / 1	2 / 1	2 / 1	2 / 1	2 / 1
Fans	n°	2	2	2	2	2	2	2	3	3	3
Refrigerant		R454B	R454B	R454B	R454B	R454B	R454B	R454B	R454B	R454B	R454B
Refrigerant charge	kg	10,0	14,5	19,0	19,0	27,0	27,0	27,0	36,0	36,0	36,0
Global warming potential (GWP)		466	466	466	466	466	466	466	466	466	466
Equivalent CO_2 charge	t	4,7	6,8	8,9	8,9	12,6	12,6	12,6	16,8	16,8	16,8
Water tank volume	l	140	140	300	300	300	300	300	500	500	500

AWHE		180	200	225	230	270	295	320	355	400	440
Heating capacity (EN14511) (1)	kW	182,0	202,0	227,0	230,0	261,0	298,0	320,0	366,0	405,0	455,0
Total input power (EN14511) (1)	kW	44,1	48,5	54,6	54,3	64,6	74,2	79,0	90,6	100,0	112,0
COP (EN14511) (1)	W/W	4,13	4,16	4,16	4,24	4,04	4,02	4,05	4,04	4,05	4,06
Energy Class (2)		A++	A++	A++	A++	A++	A++	A++	A++	A++	A++
SCOP (2)	kWh/kWh	4,25	4,20	4,12	4,20	3,92	4,01	4,05	4,06	4,04	4,01
ηs,h (2)	%	167	165	162	165	154	157	159	159	159	157
Cooling capacity (EN14511) (3)	kW	158,0	173,0	194,0	193,0	227,0	252,0	269,0	304,0	347,0	381,0
Total input power (EN14511) (3)	kW	56,9	62,7	69,8	69,6	76,8	90,4	99,0	115,0	124,0	140,0
EER (EN14511) (3)	W/W	2,78	2,76	2,78	2,77	2,96	2,79	2,72	2,64	2,80	2,72
TER (EN14511) (4)	W/W	6,20	6,11	6,01	6,11	5,89	5,77	5,83	5,81	6,76	6,89
Sound power (5)	dB (A)	90	92	91	92	91	92	92	93	91	89
Sound pressure (6)	dB (A)	58	59	58	60	58	59	59	60	59	56
Power supply	V/Ph/Hz	400/3/50	400/3/50	400/3/50	400/3/50	400/3/50	400/3/50	400/3/50	400/3/50	400/3/50	400/3/50
Compressors / Circuits	n° / n° n°	2 / 1	2 / 1	4 / 2	2 / 1	4 / 2	4 / 2	4 / 2	4 / 2	4 / 2	4 / 2
Fans		3	3	4	3	6	6	6	6	8	8
Refrigerant		R454B	R454B	R454B	R454B	R454B	R454B	R454B	R454B	R454B	R454B
Refrigerant charge	kg	45,0	45,0	60,0	60,0	72,0	72,0	72,0	72,0	90,0	100,0
Global warming potential (GWP)		466	466	466	466	466	466	466	466	466	466
Equivalent CO_2 charge	t	20,9	20,9	27,9	27,9	33,6	33,6	33,6	33,6	41,9	46,6
Water tank volume	l	500	500	500	500	500	500	500	500	500	500

Performances are referred to the following conditions:

(1) Heating: Ambient temperature 7°C DB, 6°C WB, water temperature 30/35°C.
(2) Average conditions, low temperature, variable - Reg EU 811/2013
(3) Cooling: ambient air temperature 35°C, evaporator water temperature in/out 12/7°C.
(4) TER: Total Energy Ratio - cold circuit 12/7°C, hot circuit 30/35°C.
(5) Sound power level in accordance with ISO 3744.
(6) Sound pressure level at 10 mt from the unit in free field conditions in accordance with ISO 3744.

© July 2026 A.O. Smith Water Products Company.
All right reserved www.aosmithme.com

Frame
All units are made from hot-galvanized sheet steel, painted with polyurethane powder enamel and stoved at 180°C to provide maximum protection against corrosion. The frame is self-supporting with removable panels. All screws and rivets used are made from stainless steel. The standard colour of the units is RAL9018.

Refrigerant circuit

The refrigerant circuit is assembled using internationally recognized brand name components with all brazing and welding being performed in accordance with ISO 97/23. The refrigerant utilized is R454B. The refrigerant circuit includes: sight glass, filter drier, electronic expansion valves, 4-way reversing valve, check valves, liquid receiver, liquid separator, schrader valves for maintenance and control, pressure safety device (for compliance with PED regulations).

Compressor
The compressors are scroll type, with crankcase resistance and thermal protection, installed in a separate compartment from the airflow to reduce noise. When the unit is on standby mode, the crankcase heater is always powered. Through the unit's front panel, it is possible to inspect and repair the compressors even when the unit is running.
The compressors used are tandem type. This solution allows a significantly higher efficiency with partial loads compared to the option with independent refrigerant circuits. The control system constantly monitors the discharge temperature of the single compressors.

External Air Source Heat Exchanger
The source heat exchanger is made from 3/8" copper pipes and 0,1mm at least thick aluminum fins with the tubes being mechanically expanded into the aluminum fins to maximize heat transfer. Furthermore, the design guarantees a low air pressure drop thus enabling the use of low rotation speed (and hence low noise) fans. All heat exchangers are supplied standard with fins hydrophilic coating "Blue Fins".

User Water Circuit Heat Exchangers
The user heat exchanger is a braze welded, plate-type heat exchanger, manufactured from AISI 316 stainless steel. The use of this type of heat exchanger results in a massive reduction in the refrigerant charge of the unit compared to a traditional shell & tube type. A further advantage is a reduction in the overall dimensions of the unit. The exchangers are factory insulated with flexible close cell material and can be fitted with an antifreeze heater (accessory). Each exchanger is fitted with a temperature sensor on the discharge water side for antifreeze protection

Fans

The fans are direct drive axial type with aerofoil blades, are statically and dynamically balanced and are supplied complete with a safety fan guard complying with the requirements of EN60335. They are fixed to the unit frame via rubber anti-vibration mountings. The fans are electronic type, with permanent magnet motors with an integrated driver that modulates the speed of rotation. The motors are fitted with integrated thermal overload protection and have a moisture protection rating of IP 54.

Microprocessors
All units are supplied as standard with microprocessor controls. The microprocessor controls the following functions: control of the water temperature, antifreeze protection, compressor timing, compressor automatic starting sequence (For multiple compressors), alarm reset.
The control panel is supplied with display showing all operational icons. The microprocessor is set for automatic defrost (when operating in severe ambient conditions) and for summer/ winter change over. The control also manages the integration with other heating sources (electric heaters, boilers, solar panels etc) and both the heating circuit pump and the domestic hot water circuit pump. If required (available as an option), the microprocessor can be configured in order for it to connect to a site BMS system thus enabling remote control and management

Electric Cabinet
The enclosure is manufactured **to** comply with the requirements of the electromagnetic compatibility standards 2014/35/UE and 2014/30/UE. Access to the enclosure is achieved by removing the front panel of the unit. The following components are supplied as standard on all units: main switch, a sequence relay that disables the power supply in the event that the phase sequence is incorrect (scroll compressors can be damaged if they rotate in the wrong direction), thermal overloads (protection of pumps and fans), compressor fuses, control circuit automatic breakers, compressor contactors, fan contactors and pump contactors. The terminal board has volt free contacts for remote ON-OFF, Summer/ winter change over (heat pumps only) and general alarm.

Control and Protection Device
All units are standardly equipped with several control and safety devices: water return temperature sensor, installed on the water return pipe of the system, and anti-freeze probe, installed on the water supply pipe to the system high-pressure switch with automatic reset. There are also included a low-pressure automatic reset, pressure transducer (used to optimize the defrosting cycle and modulate the rotation speed of the fans according to external conditions), Freon side safety device, compressor thermal protection, fan thermal protection, flow switch, and external air compensation probe.

Leak Detector
When the unit is powered ON, the sensor is warmed up/initialized (Duration approx. 1min.).
During this period, the LEDs inside the sensor blink, the refrigerant leakage alarm is notified, and the 24Vac auxiliary circuit is switched off. After this period, if in the absence of any further feedback from the sensor, the PLC control is powered up, and the unit is ready to operate. If refrigerant leaks occur, the sensor is activated and the power supply to the control PLC is immediately switched off until the sensor indicates the refrigerant is still present.

Display
Interface board with graphic display for displaying and managing the operating parameters of the unit.

Remote Management
A range of communication protocols are available enabling most CMS/BMS to be integrated.
- MODBUS RS485 / TCP-IP (Standard feature)
- BACNET IP/MSTP (Optional),

© July 2026 A.O. Smith Water Products Company.
All right reserved www.aosmithme.com

Accessories

AWHE		45	50	70	75	90	105	115	135	150	160
Phase monitor	MF00	●	●	●	●	●	●	●	●	●	●
Compressor overload relays	RL00	●	●	●	●	●	●	●	●	●	●
Low ambient temperature operation	BF00	●	●	●	●	●	●	●	●	●	●
Condensate discharge drip tray with antifreeze heater	BRCA	○	○	○	○	○	○	○	○	○	○
Kit of lifting eyebolts	KGS0	●	●	●	●	●	●	●	●	●	●
Kit Victaulic	KVICT	●	●	●	●	●	●	●	●	●	●
Sanitary Probe Kit	SOND1	●	●	●	●	●	●	●	●	●	●
Electronic expansion valve	VTEE	●	●	●	●	●	●	●	●	●	●
Refrigerant Gas R454B	F454	●	●	●	●	●	●	●	●	●	●
Display	HMI.Pro	●	●	●	●	●	●	●	●	●	●
HiPro.web	HiPro.web	○	○	○	○	○	○	○	○	○	○
Electronic soft starter	DSSE	○	○	○	○	○	○	○	○	○	○
Rubber anti-vibration dampers	KAVG	○	○	○	○	○	○	○	○	○	○
Spring anti-vibration dampers	KAVM	○	○	○	○	○	○	○	○	○	○
Pressure Gauges	MAML	○	○	○	○	○	○	○	○	○	○
Serial interface card RS485	INSE	●	●	●	●	●	●	●	●	●	●
BACNET Protocol Serial Interface	IBAC	○	○	○	○	○	○	○	○	○	○
60 Hz Compressors	AV	○	○	○	○	○	○	○	○	○	○

AWHE		180	200	225	230	270	295	320	355	400	440
Phase monitor	MF00	●	●	●	●	●	●	●	●	●	●
Compressor overload relays	RL00	●	●	●	●	●	●	●	●	●	●
Low ambient temperature operation	BF00	●	●	●	●	●	●	●	●	●	●
Condensate discharge drip tray with antifreeze heater	BRCA	○	○	○	○	○	○	○	○	○	○
Kit of lifting eyebolts	KGS0	●	●	●	●	●	●	●	●	●	●
KIT VICTAULIC	KVICT	●	●	●	●	●	●	●	●	●	●
SANITARY PROBE KIT	SOND1	●	●	●	●	●	●	●	●	●	●
Electronic expansion valve	VTEE	●	●	●	●	●	●	●	●	●	●
REFRIGERANT GAS R454B	F454	●	●	●	●	●	●	●	●	●	●
Display	HMI.Pro	●	●	●	●	●	●	●	●	●	●
HiPro.web	HiPro.web	○	○	○	○	○	○	○	○	○	○
Electronic soft starter	DSSE	○	○	○	○	○	○	○	○	○	○
Rubber anti-vibration dampers	KAVG	○	○	○	○	○	○	○	○	○	○
Spring anti-vibration dampers	KAVM	○	○	○	○	○	○	○	○	○	○
Pressure Gauges	MAML	○	○	○	○	○	○	○	○	○	○
Serial interface card RS485	INSE	●	●	●	●	●	●	●	●	●	●
BACNET Protocol Serial Interface	IBAC	○	○	○	○	○	○	○	○	○	○
60 Hz Compressors	AV	○	○	○	○	○	○	○	○	○	○

●Standard, ○Optional

Dimensions and Clearances

Enevator air heat pumps are designed for outdoor installation. For them to work efficiently and effectively, it is vital that there is enough air volume and unobstructed, free airflow for the fan. It is therefore essential that the heat pump has enough free space around it, so that intake and exhaust air can circulate without any hindrance. In the manual, you will find detailed information on assembling, installing, and maintaining this product. Information regarding the installation, recycling, or disposal of this product can also be found in the manual.

© July 2026 A.O. Smith Water Products Company.
All right reserved www.aosmithme.com

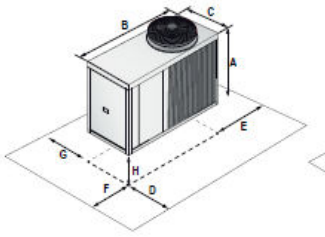

F1

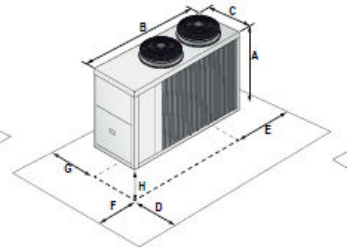

F2

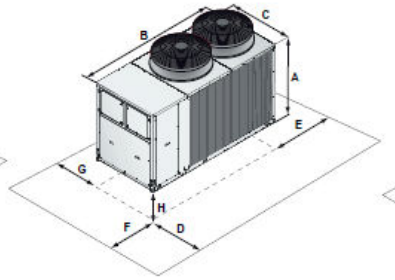

F3

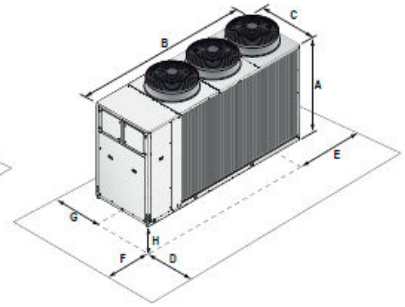

F4

AWHE	45	50	70	75	90	105	115	135	150	160
A (mm)	1673	1673	1839	1839	1918	1918	1918	1918	1918	1918
B (mm)	2400	2400	3000	3000	3000	3000	3000	4295	4295	4295
C (mm)	1265	1265	1265	1265	1265	1265	1265	1265	1265	1265
D (mm)	1000	1000	1500	1500	1500	1500	2000	2000	2000	2000
E (mm)	800	800	1000	1000	1000	1000	1000	1000	1000	1000
F (mm)	800	800	1000	1000	1000	1000	1000	1000	1000	1000
G (mm)	800	800	1000	1000	1000	1000	1000	1000	2000	2000
H (mm)	350	350	350	350	350	350	350	350	350	350
Kg	650	658	884	890	1100	1108	1110	1688	1714	1722
Frame	**F1**	**F1**	**F2**	**F2**	**F3**	**F3**	**F3**	**F4**	**F4**	**F4**

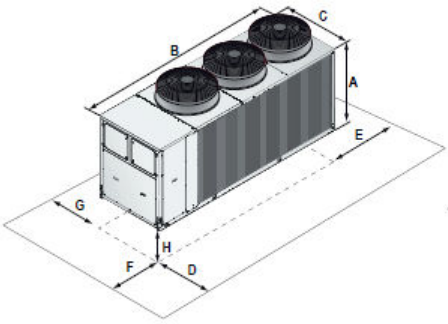

F4,5

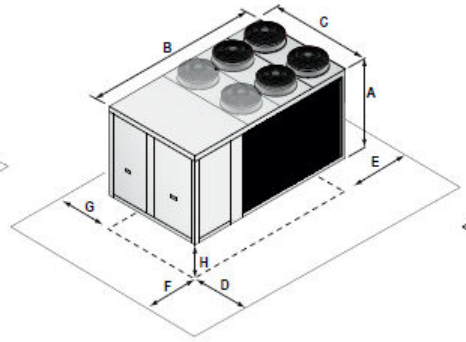

F5

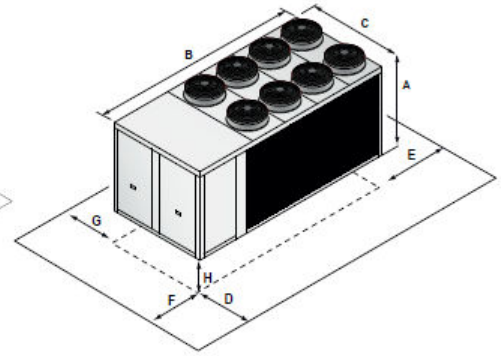

F6

AWHE	180	200	225	230	270	295	320	355	400	440
A (mm)	1918	2287	2378	2287	2378	2378	2378	2378	2378	2378
B (mm)	4295	4296	4515	4296	4515	4515	4515	4515	5557	5557
C (mm)	1265	1265	2310	1265	2310	2310	2310	2310	2310	2310
D (mm)	1000	1000	1500	1500	1500	1500	2000	2000	2000	2000
E (mm)	800	800	1000	1000	1000	1000	1000	1000	1000	1000
F (mm)	800	800	1000	1000	1000	1000	1000	1000	1000	1000
G (mm)	800	800	1000	1000	1000	1000	1000	1000	2000	2000
H (mm)	350	350	350	350	350	350	350	350	350	350
Kg	1776	1762	1778	3262	3348	3438	3438	3508	3658	3686
Frame	**F4**	**F4,5**	**F5**	**F4,5**	**F5**	**F5**	**F5**	**F5**	**F6**	**F6**

© July 2026 A.O. Smith Water Products Company.
All right reserved www.aosmithme.com